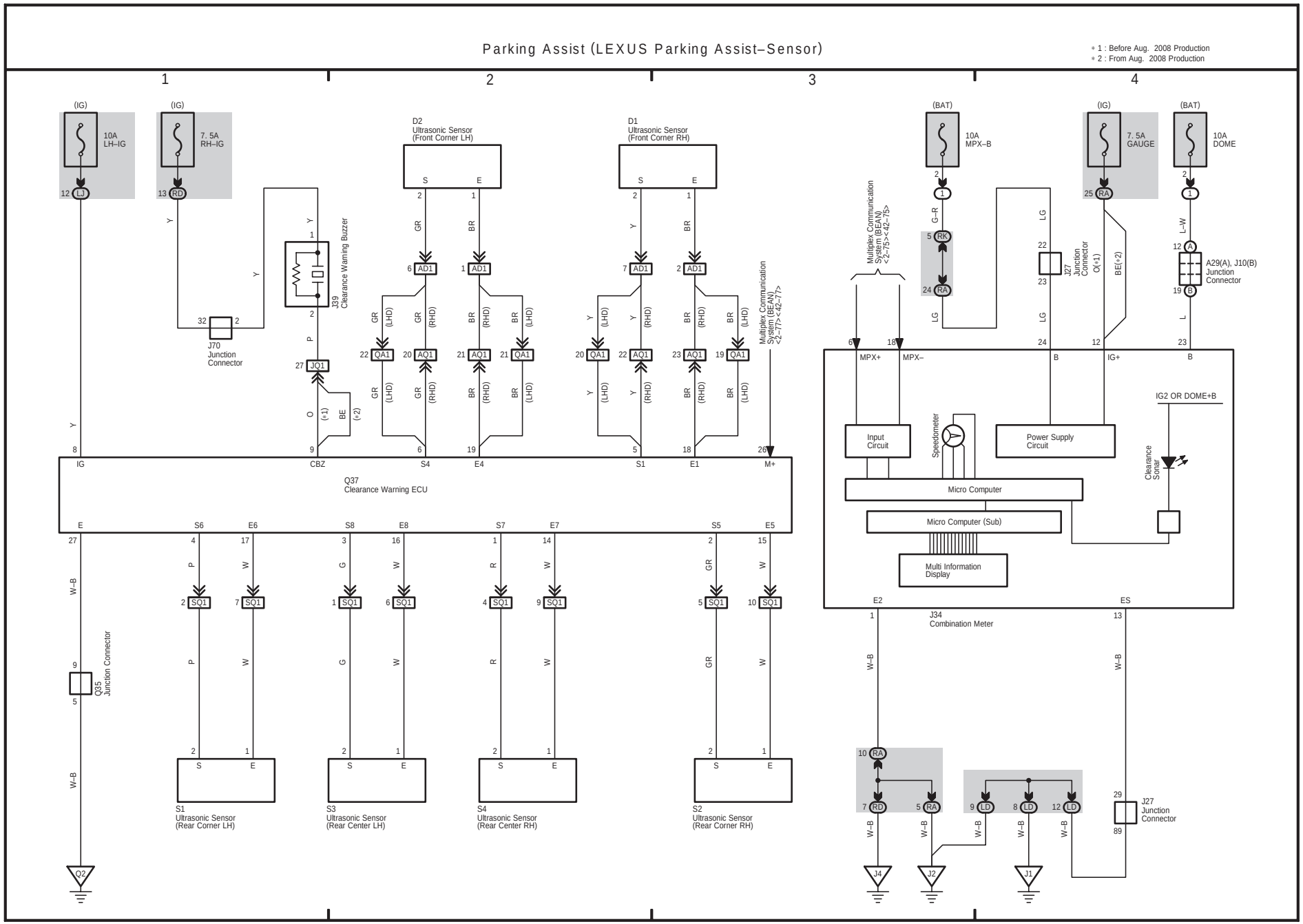33 IS 350 / IS 300 / IS 250 / IS 220d / IS 200d